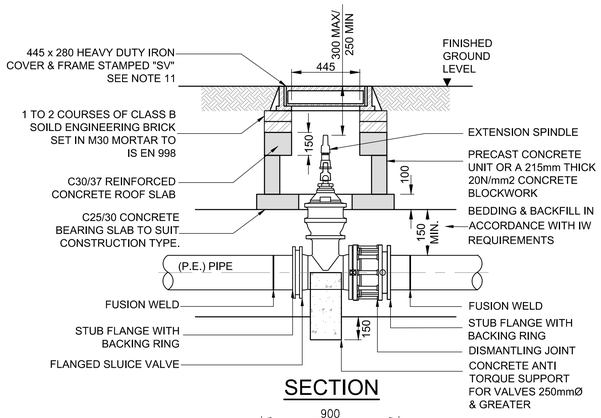

SECTION

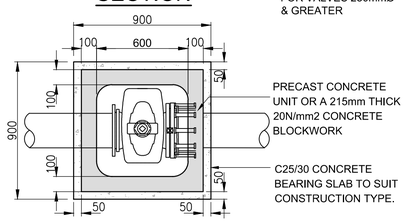

PLAN

SLUICE VALVE CHAMBER (P.E. PIPE)

(IN ACCORDANCE WITH STD-W-15 REV 3)

SCALE 1:20@A1

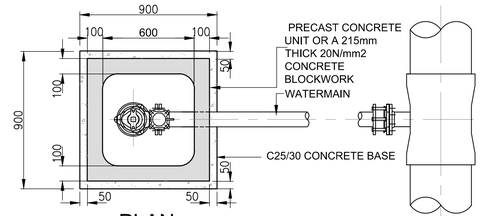

PLAN

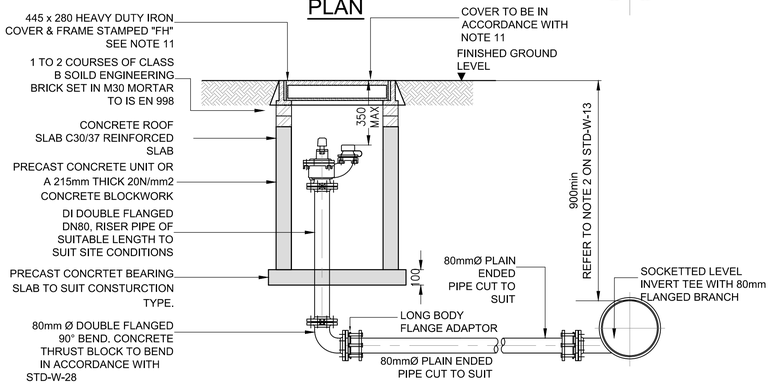

SECTION

OFFLINE HYDRANT (P.E. PIPE)

(IN ACCORDANCE WITH STD-W-19 REV 4)

SCALE 1:20@A1

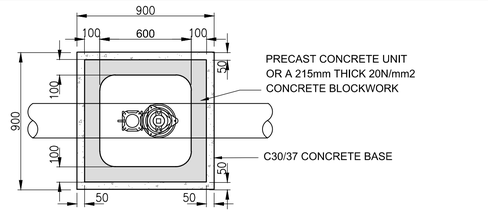

PLAN

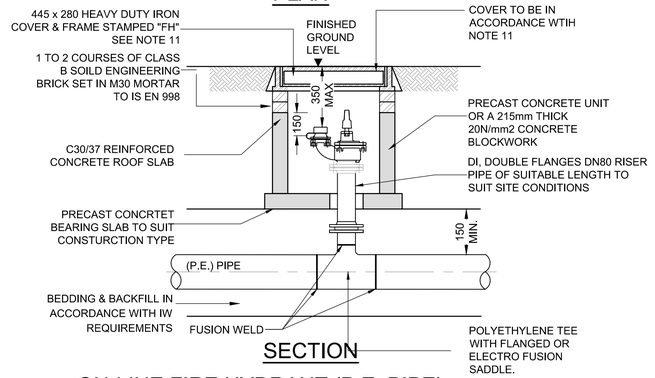

SECTION

ON-LINE FIRE HYDRANT (P.E. PIPE)

(IN ACCORDANCE WITH STD-W-18 REV 3)

SCALE 1:20@A1

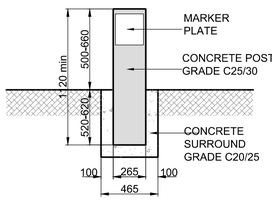

ELEVATION

PLAN

SCALE 1:25

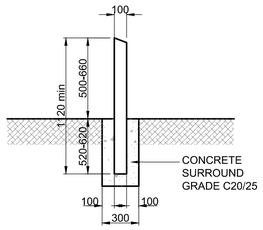

SECTION

HYDRANT MARKER DETAIL

SCALE 1:25@A1

1:50@A3

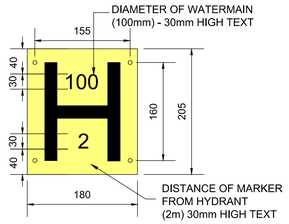

HYDRANT MARKER PLATE DETAIL

SCALE 1:5@A1

1:10@A3

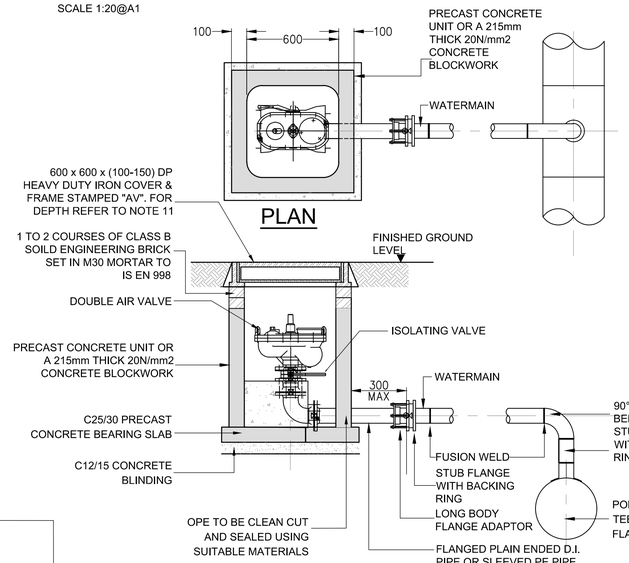

OFFLINE AIR VALVE (P.E. PIPE)

SCALE 1:20@A1

1:40@A3

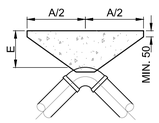

90° BEND

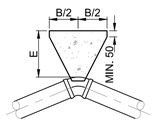

45° BEND

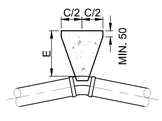

22.5° BEND

< 12 BAR TEST PRESSURE

NOM. DIA. (mm)	DIMENSIONS						
	A	B	C	D	E	F	G
100	600	330	160	80	200	350	390
150	950	510	260	130	225	450	660
200	1150	600	310	160	300	650	790
250	1350	750	380	200	300	800	970
300	1580	850	450	220	320	950	1110

CONCRETE GRADE C20/25 IN THRUST BLOCKS

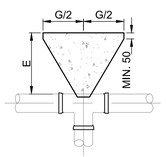

TEE JUNCTION

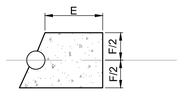

SECTIONAL ELEVATION FOR BEND OR TEE

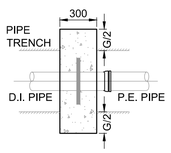

PLAN

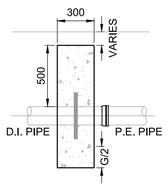

SECTION

DUCTILE IRON TO P.E. PIPE CHANGEOVER

THRUST BLOCKS (TEST PRESSURE OF < 12 BAR)

SCALE 1:25@A1

1:50@A3

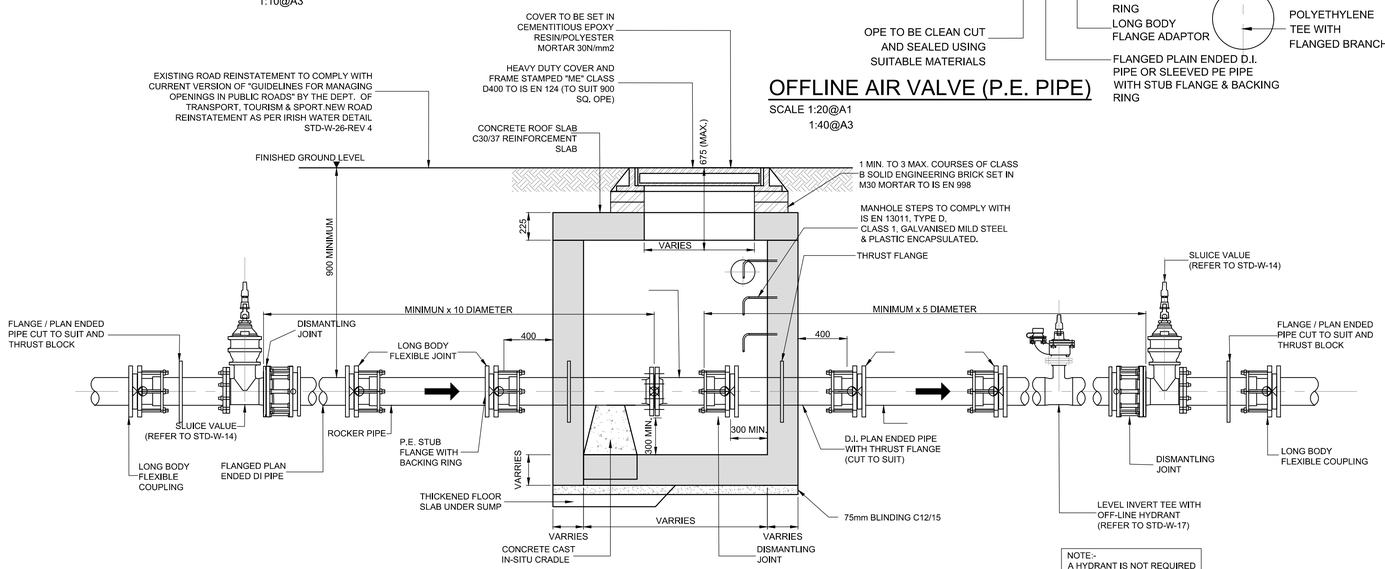

ELECTROMAGNETIC METER CHAMBER (80 - 250mm DIA.)

SCALE 1:20

NOTE:-
A HYDRANT IS NOT REQUIRED WHERE DN 50 WATER MATER IS INSTALLED

NO DIMENSION SHALL BE SCALED FROM THIS DRAWING. ALL DIMENSIONS SHALL BE SITE CHECKED. THE ENGINEER SHALL BE NOTIFIED IMMEDIATELY OF ANY DISCREPANCIES BEFORE WORK PROCEEDS

Notes :-

IRISH WATER STANDARD DETAIL NOTES

1. ALL DIMENSIONS ARE IN MILLIMETRES (mm) UNLESS NOTED OTHERWISE.
2. ALL PIPEWORK, MANHOLES, CHAMBERS AND ASSOCIATED PIPEWORK TO BE CONSTRUCTED TO CURRENT IRISH WATER CODES OF PRACTICE AND STANDARD DETAILS.
3. BUTT FUSION WELDING, ELECTRO FUSION JOINTING AND COUPLING OF PIPES SHALL ONLY BE CARRIED OUT BY TRAINED OPERATIVES IN POSSESSION OF A CURRENT TRAINING CERTIFICATE. USING FULLY AUTOMATIC APPROVED JOINTING MACHINE/RIGS IN ACCORDANCE WITH THE MANUFACTURER'S INSTRUCTIONS.
4. DUCTILE IRON PIPES/ FITTINGS AND PE PIPES/FITTINGS TO BE IN ACCORDANCE WITH IS EN 545 AND IS EN 12201:2011.
5. THE MINIMUM DEPTH OF COVER FROM THE FINISHED GROUND LEVEL TO THE EXTERNAL CROWN OF THE PIPE SHALL BE 750mm FOR SERVICE CONNECTIONS, 900mm FOR WATER MAINS. THE MAXIMUM COVER SHOULD NOT EXCEED 1,200mm WHERE PRACTICABLE.
6. SHOULD MINIMUM COVER NOT BE ACHIEVABLE, CONCRETE GRADE C8/10 SHALL BE USED AS BACKFILL MATERIAL.
7. PIPES SHALL NOT BE SUPPORTED ON STONES OR ROCKS, OR ANY HARD OBJECT AT ANY POINT ALONG THE TRENCH. ROCK SHALL BE EXCAVATED TO A DEPTH OF 150mm BELOW THE ACTUAL DEPTH OF THE TRENCH WITH THE VOID FILLED WITH CLAUSE 804 MATERIAL.
8. SELECTED FILL SHOULD BE FREE FROM STONES LARGER THAN 37mm, LUMPS OF CLAY OVER 75mm, TIMBER, FROZEN MATERIAL AND VEGETABLE OR FOREIGN MATTER.
9. MARKER TAPE TO BE 400mm WIDE BLUE POLYETHYLENE MATERIAL IN ACCORDANCE WITH EN 12163, PLASTIC PIPES SHALL HAVE WARNING TAPE INCORPORATING A REINFORCED BAND BRACING WIRE. MARKER TAPE TO BE LAID AT TOP OF PIPE BEDDING LAYER.
10. 200mm ALL ROUND, 100mm DEEP CONCRETE PLINTH WITH PROTECTIVE STAINLESS STEEL METAL BAND AROUND COVERS IN GREEN AREAS.
11. MANHOLE COVERS AND FRAMES TO COMPLY WITH THE REQUIREMENTS OF IS/EN 124:1994 & BS 7903. COVERS IN SERVICE YARDS TO BE APPROVED MINIMUM CLASS E600. ROADWAYS TO BE AN APPROVED CLASS D400 COVER TO BE IN CEMENTITIOUS EPOX RESIN/POLYESTER MORTAR 30N/mm2. MINIMUM FRAME DEPTH (100-150mm).
12. ALL HYDRANTS TO BE CLOCKWISE CLOSING. ALL VALVES TO BE ANTI- CLOCKWISE CLOSING
13. ALL CHAMBERS TO BE SURROUNDED BY 150MM CLAUSE 808 MATERIAL COMPACTED AS PER CLAUSE 802 OF THE NATIONAL ROADS AUTHORITY SPECIFICATION FOR ROAD WORKS.
14. ANTI CORROSION TAPE TO BE PROVIDED AROUND ALL BURIED FLANGES.
15. SLUICE VALVES SHALL BE DOUBLE FLANGED WITH DUCTILE IRON RESILIENT SEAL GATE VALVES, SUITABLE FOR USE IN WATER MAINS. THEY SHALL COMPLY WITH THE REQUIREMENTS OF IS EN 1074 AND THEY SHALL HAVE AN APPROPRIATE CE MARKING.
16. AIR VALVES SHALL COMPLY WITH IS EN 1074-4. AIR VALVES SHALL BE DOUBLE ORIFICE TYPE AND SHALL INCLUDE AN ISOLATING VALVE. THE ISOLATING VALVE SHALL BE A GATE VALVE CONFORMING TO IS-1074-2 & SHALL BE OF A BOLTLESS BONNET DESIGN.
17. FIRE HYDRANTS SHALL BE TYPE 2 INLET 80mm PN16 TO BS 750.
18. TELEMETRY MINI PILLAR, DUCTWORK AND ALL ASSOCIATED FITTINGS AND REQUIREMENTS TO M&E SPECIFICATION.
19. LOCATION OF TELEMETRY MINI PILLAR TO ARCHITECTS DETAIL.
20. WHERE PRACTICAL, MARKER PLATES SHALL BE FIXED TO ADJACENT WALLS OR ALTERNATIVELY ATTACHED TO MARKER POSTS.

NOTE :-
ALL WATERMAIN WORKS TO BE IN ACCORDANCE WITH THE IRISH WATER CODE OF PRACTICE FOR WATER SUPPLY AND ASSOCIATED STANDARD DETAILS

Rev	Description	Date	Drn	Apr
PL2	PLANNING ISSUE	12.08.22	LL	ED
PL1	PLANNING ISSUE	05.11.21	LL	ED

Project Stage
Planning

Client
Serendale Limited

Architect
JSA Architects

EIRENG CONSULTING ENGINEERS
IRELAND - Rogans Court, Patrick Street, Dunlaoghaire, County Dublin, A96 TDH2 ■ +353 1 6638952
UNITED KINGDOM - Cambridge House South, Henry Street, Bath, BA1 1BT ■ +44 1 225 618222
info@eireng.com
eireng.com

Project
OMNI PLAZA SHD

Drawing Title
CONSTRUCTION DETAILS SHEET 5

Job No. (Eir Eng)	Drg Status	Scale @ A1
201121		1:25@A1 1:50@A3

Drawn By	Checked By	Approved By	Checked Date
L Lonergan	T Byrne	E Deasy	25.06.2021

Drawing Number	Revision
201121-ECE-ZZ-XX-DR-C-0011	PL2

© The drawings & designs herein, remain copyright of EirEng Consulting Engineers Ltd & shall not be reproduced without appropriate written consent.

COLOUR DRAWING